Stepper Driver - ELFDRV1

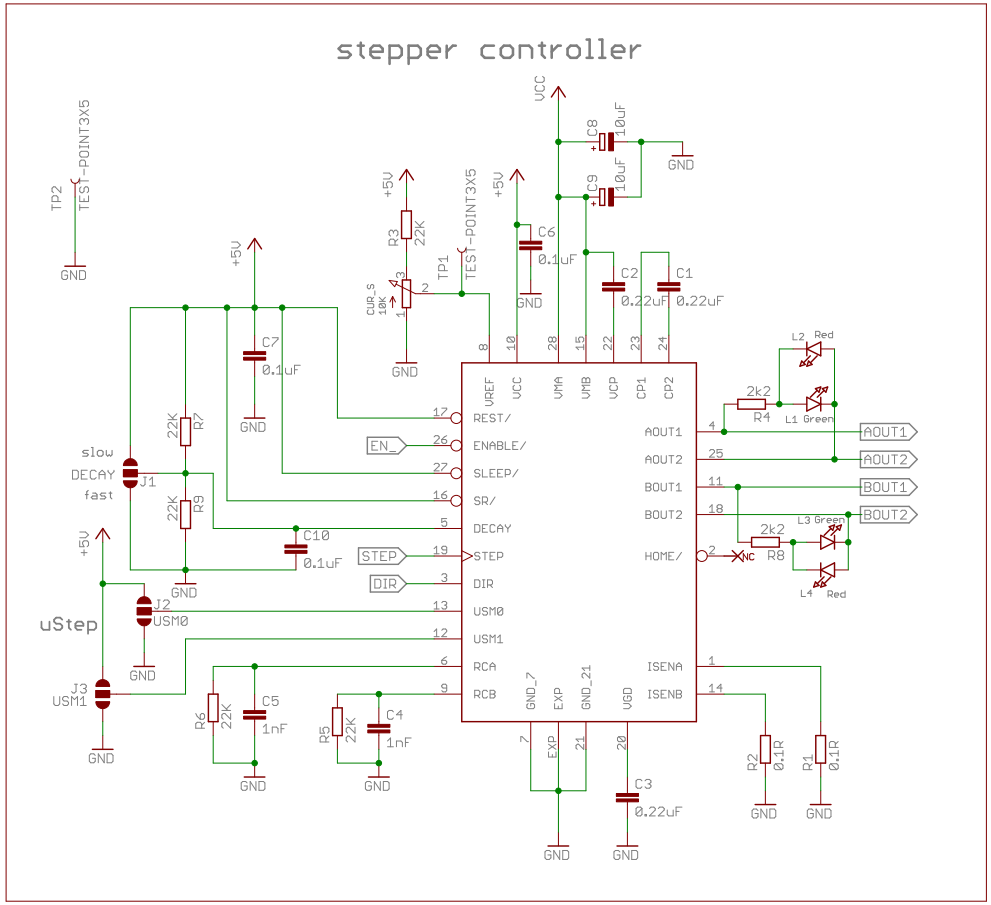

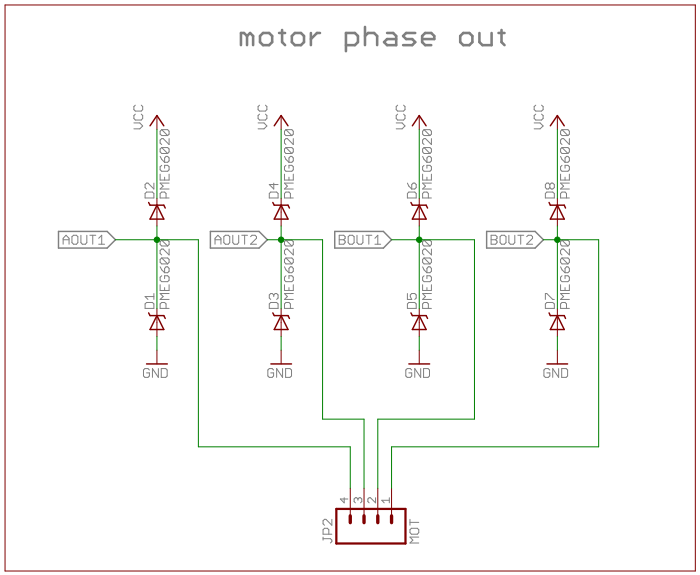

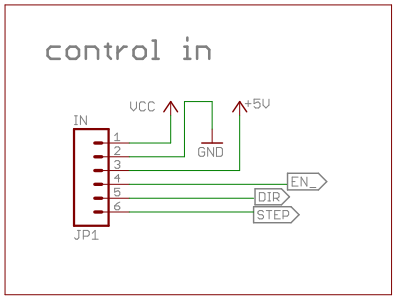

open hardware

CC SA-BY
Released under the Creative Commons Attribution Share-Alike 3.0 License
http://creativecommons.org/licenses/by-sa/3.0

REV_B.1
STEPPER DRIVER

electroFUN LTD	
TITLE: stepperMotorDriver	
Document Number:	REV: B.1
Date: 23/08/12 19:03	Sheet: 1/1