GND
VDD
RxD
TxD
SDA
SCL
GND
GND
VDD
MCLR
PGC
PGD
GND
ICSP
© Richard Zengerink Jalib group
http://code.google.com/p/jalib/

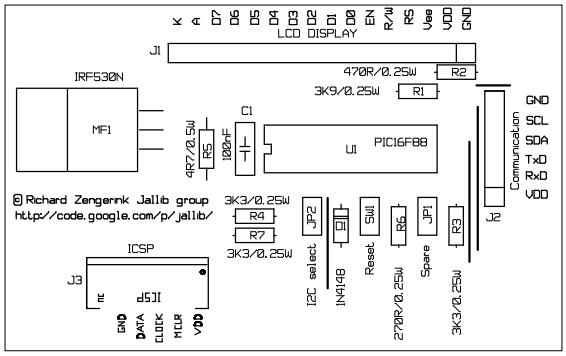
K
A
D7
D6
D5
D4
D3
D2
D1
D0
EN
R/W
RS
Vee
VDD
GND
LCD DISPLAY
J1
IRF530N
MF1
4R7/0.5W
R5
C1
100nF
470R/0.25W
R2
3K9/0.25W
R1
U1
PIC16F88
GND
SCL
SDA
TxD
RxD
VDD
Communication
J2
© Richard Zengerink Jallib group
http://code.google.com/p/jallib/
3K3/0.25W
R4
R7
3K3/0.25W
JP2
I2C select
D1
1N4148
SW1
Reset
R6
270R/0.25W
JP1
Spare
R3
3K3/0.25W
ICSP
J3
nc
ICSP
GND
DATA
CLOCK
MCLR
VDD